NOTES: UNLESS OTHERWISE SPECIFIED.

1. O-RING AND MOUNTING SCREWS SUPPLIED BY AEROANTENNA.
2. LABEL SIZE, SHAPE, CONTENTS AND LOCATION ARE SUBJECT TO CHANGE WITHOUT NOTICE.
3. TOLERANCES: .XX = ±.03
   .XXX = ±.010

ppm GmbH
Grube 39a
82377 Penzberg
Germany

Tel: +49 (0) 88 56 8 03 09 80
Fax: +49 (0) 88 56 8 03 09 88

info@ppmgmbh.com
www.ppmgmbh.com

REVISED BY:	DATE:
C. FRANTZIDES	10/11/17

REVISIONS

REV.	DESCRIPTION	DATE	APPROVED
H	UPDATE PER ECO12822	10/11/17	
	REVISED ENV. CAT. STRING.		

APPROVED DOCUMENT 10/27/17

AT1675-180

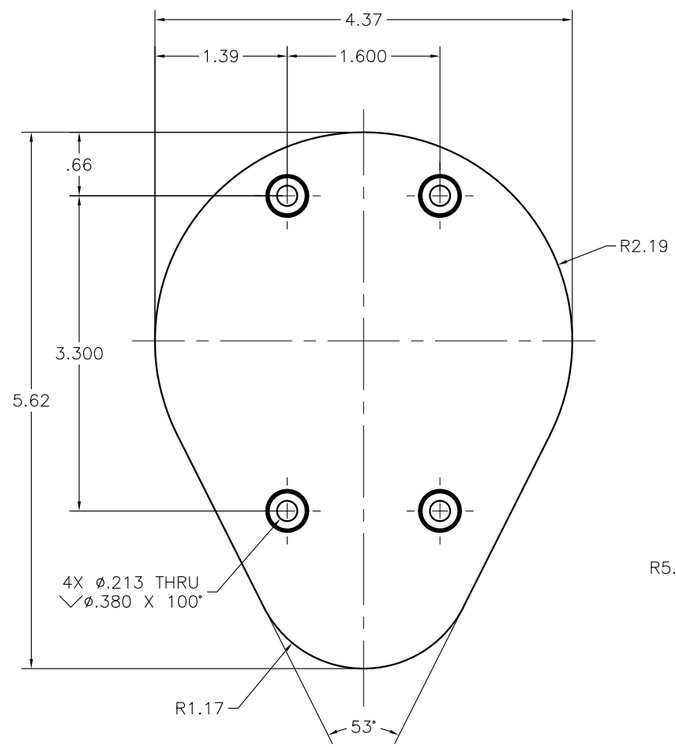

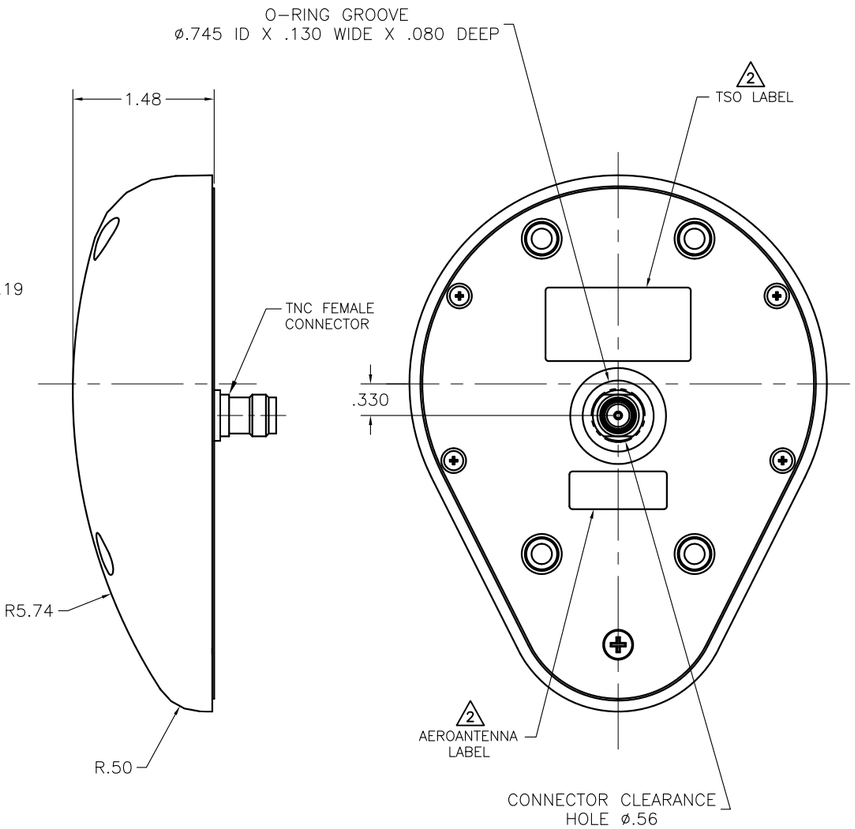

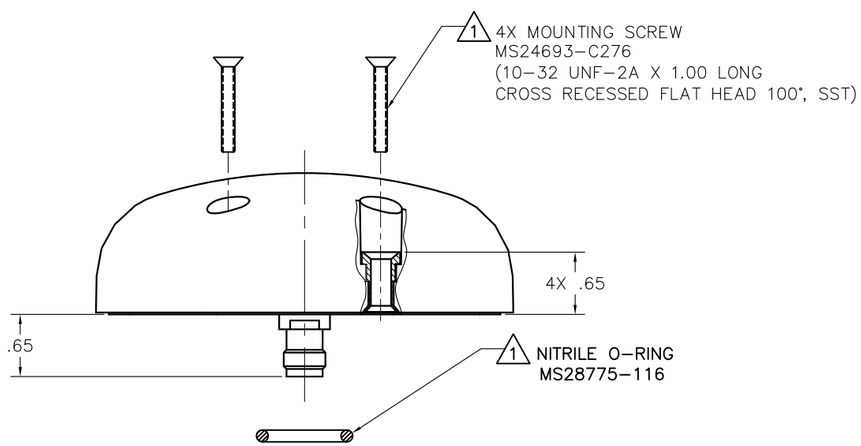

SPECIFICATION:

FREQUENCY:	1525–1610 MHz, L–Band, L1, Glonass (G1) 1160–1252 MHz L2, Glonass (G2), Galileo (L5)
POLARIZATION:	RIGHT HAND CIRCULAR
AXIAL RATIO:	3 dB MAX @ BORESIGHT
AMPLIFIER:	
GAIN:	38 dB MIN.
NOISE FIGURE:	3.5 dB MAX ACROSS THE BAND
IMPEDANCE:	50 OHMS
VSWR:	≤2.0:1
POWER HANDLING:	1 WATT
FINISH:	UV RESISTANT WHITE RADOME WITH ALUMINUM BASE
WEIGHT:	.85 LBS MAX.
OPERATING TEMP:	–55°C TO +70°C
STORAGE TEMP:	–55°C TO +85°C
DESIGNED TO:	DO–160D ENV CAT: F2–AB[BE][S(CLMY)U(FF1)]HSFSFSZAAZZ[RYR]H[A4J44][2A]CA ARINC 743 FOOTPRINT, RTCA DO–210D
TSO:	INCOMPLETE TSO–C132

PART NO. DESIGNATION:

AT1675–180W–TNCF–000–RG–38–NM

- COLOR: W = WHITE
- CONNECTOR: TNCF = TNC FEMALE
- CABLE LENGTH: 000 = IN INCHES
- VOLTAGE: RG = 4.2 TO 15.0 VDC; 00 = PASSIVE
- GAIN (±3 dB): 38 = 38 dB (130 mA MAX); 00 = PASSIVE
- MAGNET: NM = NO MAGNET

STANDARD MODEL= AT1675–180W–TNCF–000–RG–38–NM

DO NOT SCALE THIS DRAWING
REMOVE BURRS AND BREAK SHARP EDGES:
PART TO BE CLEAN AND OIL FREE
ALL DIMENSIONS ARE IN INCHES
DIMENSIONING & TOLERANCING PER ASME Y14.5M–1994
TOLERANCES:
~~.XX = ±.01~~ FRACT = ±1/32
~~.XXX = ±.005~~ ANG. = ±1/2°
SURFACE ROUGHNESS
MACHINED PARTS √63
MOLDED PARTS √32

HOLE DIA.	TOLERANCE
.0135 – .125	+.004 –.001
.126 – .250	+.005 –.001
.251 – .500	+.006 –.001
.501 – .750	+.008 –.001

NEXT ASSY

DRAWN	A. GUTIERREZ	10/16/12
CHECKED		
ENGR	BILL EATON	10/27/17
MFG	WAYNE FORD	10/27/17
Q.A.	B. RUBENI	10/27/17
APPROVED	YOUSI ZADEH	10/27/17
DRAWN IN	CAD	

AeroAntenna Technology Inc
AS9100 CERTIFIED CO.

TITLE: AMSS/GNSS ANTENNA

SIZE	CAGE CODE	DRAWING NO.	REV
B	0UVG2	AT1675–180	H

SCALE NONE | I:\CAD\AT1675\–180\AT1675–180_H | SHEET 1 OF 1

PROPRIETARY NOTE: This document contains information of AeroAntenna Technology Inc. (AAT). Neither the document nor said proprietary information shall be published, reproduced, copied, disclosed or used for any other purpose other than consideration of document without the express written permission of a duly authorized representative of said AeroAntenna Technology Inc.